Final Exam (200 pts) - Fall 2010 - M. Cahay

Name:

ELECTRONICS I
December 8, 2010

1. (20 pts) In the circuit below, a measurement shows that the emitter voltage is 1.2V. Find V_B, V_C, I_E, I_B, I_C, and the value of β and α. Neglect the effect of the Early voltage ($\lambda = 0$).

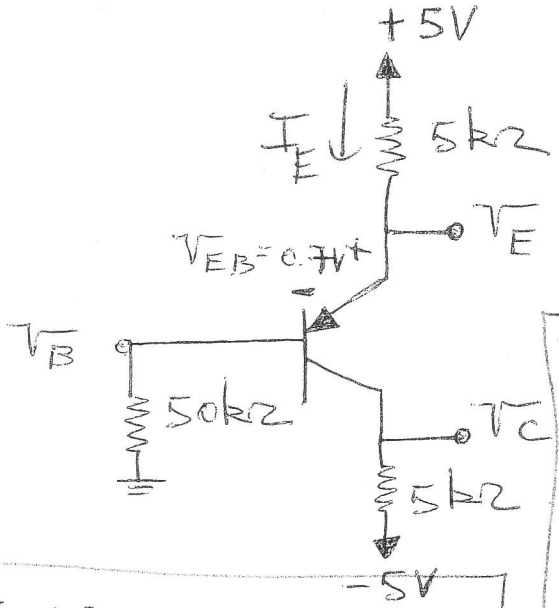

$$I_E = \frac{5-1.2}{5} = 0.76\,mA$$

$$V_B = 1.2 - 0.7 = 0.5V$$

$$I_B = \frac{0.5-0}{50k\Omega} = 0.01\,mA$$

$$I_C = I_E - I_B = 0.75\,mA$$

+10

+5

$$V_C = -5 + 0.75 \times 5 = -1.25V$$

$$\beta = \frac{I_C}{I_B} = \frac{0.75}{0.01} = 75$$

+5

$$\alpha = \frac{\beta}{\beta+1} = \frac{75}{76} = 0.987$$

2. (20 pts) Measurements on the circuit below produce the labeled voltages as indicated. Find the value of β for the transistor.

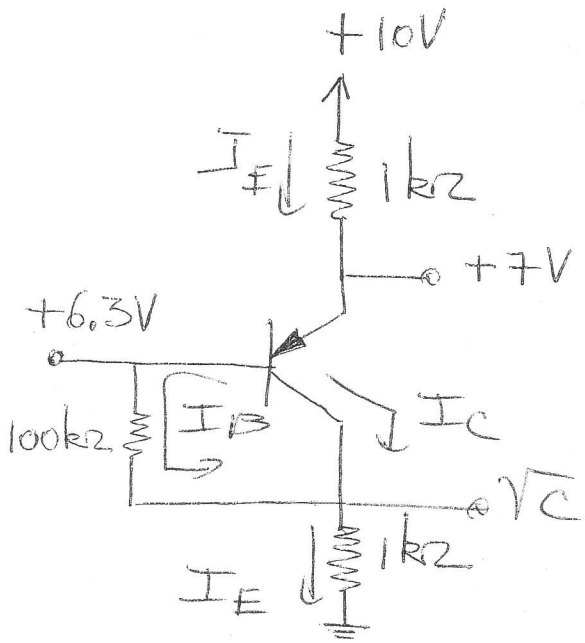

$$I_E = \frac{10-7}{1k} = 3\,mA$$ +4

$$I_E = I_C + I_B = 3\,mA$$ +4

$$V_C = 3\,mA\,(1k) = 3V$$ +4

$$I_B = \frac{6.3-3}{100\,k\Omega} = 33\,\mu A$$ +4

$$\frac{I_E}{I_B} = \beta + 1 = \frac{3\,mA}{33\,\mu A} = 90.9$$

$$\rightarrow \boxed{\beta = 89.9}$$ +4

3. (30 pts) **The BJT as an amplifier**

- (a) In the circuit below, assume $V_{BE} = 0.7V$ and calculate the value of the collector current and the voltage at the collector.
- (b) Using the T-model of the BJT and neglecting the effect of r_0, draw the small signal equivalent circuit of the amplifier.
- (c) Using the results of part (b), calculate the voltage gain of the amplifier, v_0/v_i.

$\beta = 100$

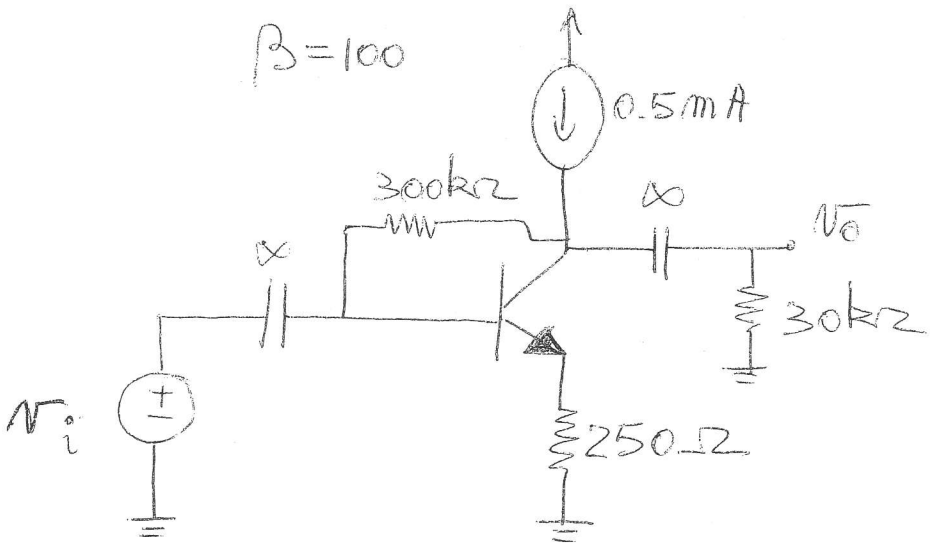

(a) DC

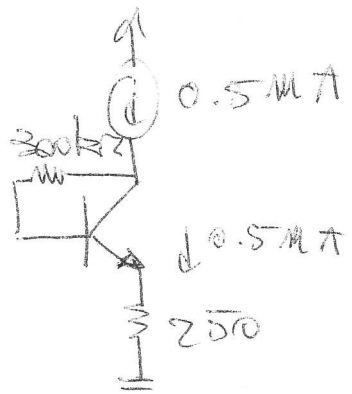

$I_C = 0.99 \times 0.5mA = 0.495mA$

$V_C = I_E R_E + V_{BE} + R_B I_B$

$= 0.5 * 0.175 + 0.7 + 0.005 \times 300$

$\boxed{V_C = 2.28V}$ +10

(b)

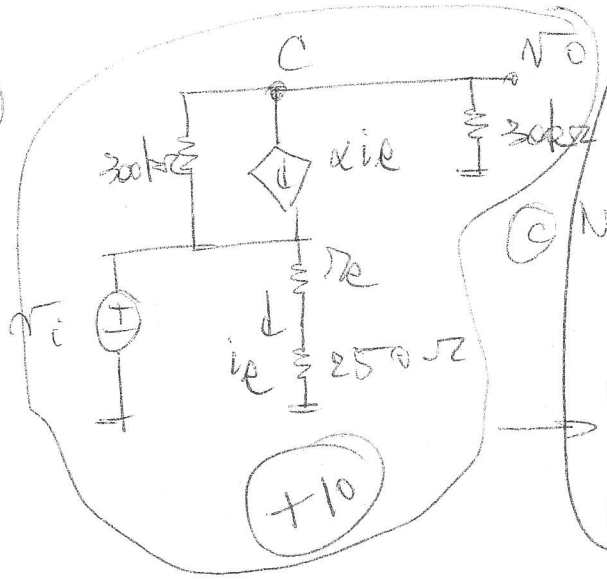

+10

$i_e = v_i/(r_e + R_E) = v_i/300$

$r_e = \frac{V_T}{I_E} = 50\Omega$

(c) Node Eq. at C

$\frac{v_o - v_i}{300k\Omega} + \alpha i_e + \frac{v_o}{30k} = 0$

$\boxed{\frac{v_o}{v_i} = -90V/V}$ +10

4. (30 pts) **The BJT as an amplifier**

- (a) Is the amplifier below a (1) common-emitter, (2) common-base, or (c) common-collector configuration (circle the correct answer)?
- (b) Including the effects of r_0 and using the T-model of the transistor, draw the small-signal equivalent circuit of the amplifier. Derive the analytical expression for the small-signal voltage gain $A_v = v_0/v_i$ of the amplifier.
- (c) Derive the expression for the input resistance R_{in}.

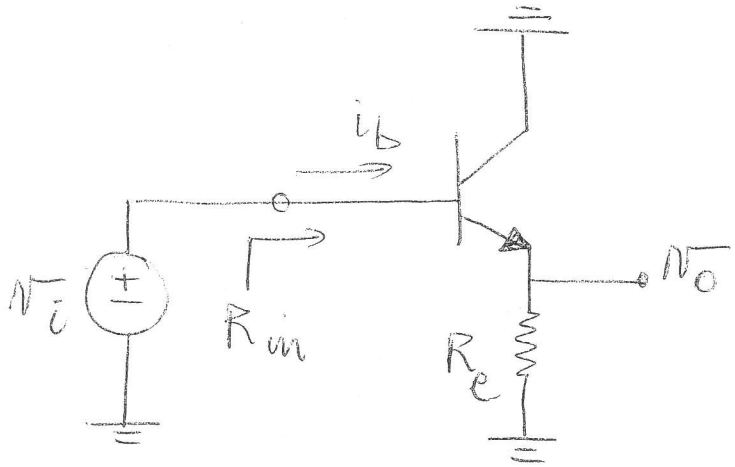

+16

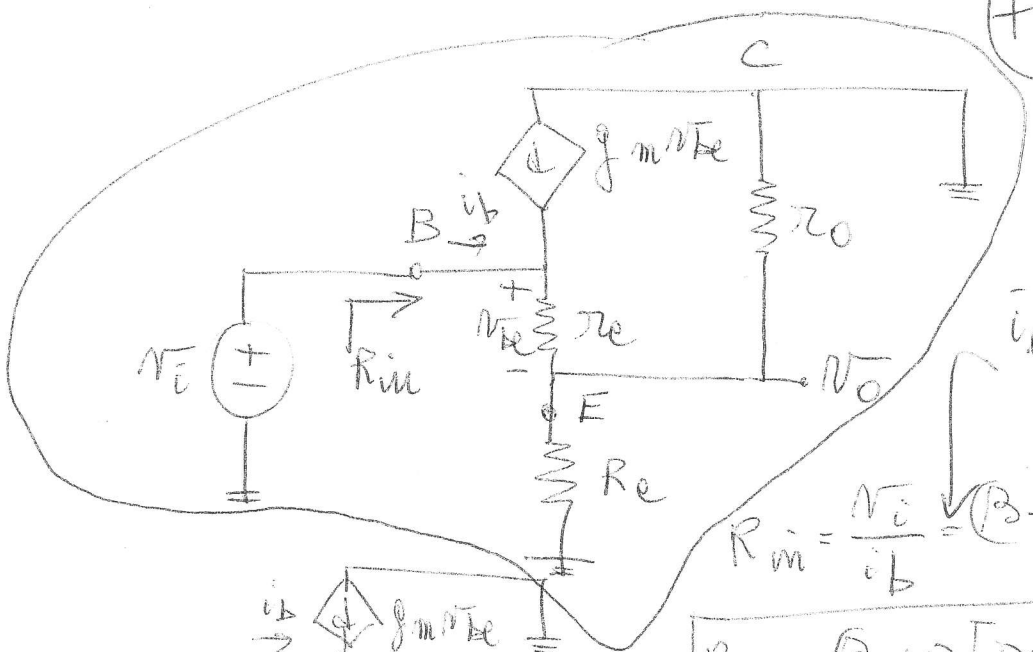

$i_e = (\beta+1)\, i_b$

$$R_{in} = \frac{v_i}{i_b} = (\beta+1)\frac{v_i}{i_e}$$

+7

$$\boxed{R_{in} = (\beta+1)\left[r_e + (R_e // r_o)\right]}$$

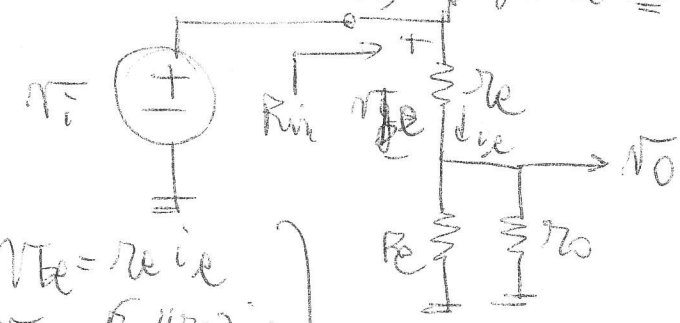

$$v_i = v_{be} + v_o = v_o\left[1 + \frac{v_{be}}{v_o}\right]$$

$v_{be} = r_e i_e$

$v_o = (R_e // r_o)\, i_e$

$$\boxed{\frac{v_o}{v_i} = \frac{1}{1+\frac{v_{be}}{v_o}} = \frac{1}{1+\frac{r_e}{(R_e // R_o)}}}$$

+7

5. (20 pts) In the circuit below, the enhancement-NMOS transistor has a threshold voltage $V_t = 1V$. Futhermore $k_n'(W/L) = 0.4$ mA/V^2 and $\lambda = 0$. Find the labeled voltage V_1.

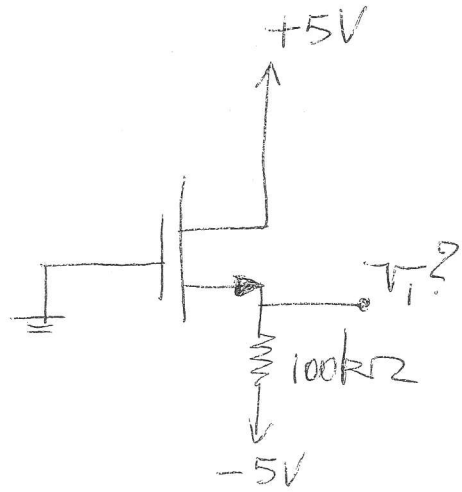

$V_D = 5V$

$V_G = 0$

V_S ? unknown

$V_{DS} \overset{?}{\geq} V_{GS} - V_t$

$V_D > V_G - V_t$

$5 \checkmark 0 - 1$

→ Saturation (+5)

$$\frac{V_1 + 5}{100} = I = \frac{1}{2}(0.4)(5 - V_1)^2 \quad (+5)$$

$$= \frac{1}{2}(0.4)(5 - 100I - 1)^2$$

$$\rightarrow I = \cancel{0.045} \; \cancel{0.036} \text{ mA} \quad (+5)$$

$V_{GS} < V_t$
cut off

$$\boxed{V_1 = -5 + 100I = -1.4V} \quad (+5)$$

6. (20 pts) The transistor below has a threshold voltage $V_t = 0.5V$. Futhermore $k_n' = 0.4\ mA/V^2$ and $\lambda = 0$. Show that the transistor operates at the edge of saturation if the following condition is satisfied

$$\frac{W}{L} R_D = 1.5k\Omega$$

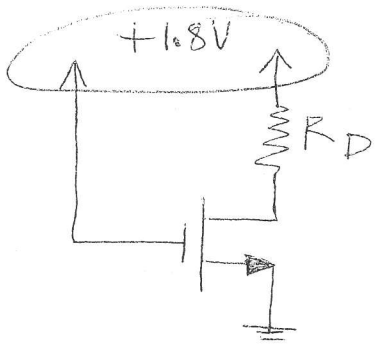

$k_n' = 0.4\ mA/V^2$

$V_t = 0.5V$

$\lambda = 0$

Saturation boundary $V_{GD} = 5V = R_D I_D$ (+5)

$0.5 = \frac{1}{2} k_n' \frac{W}{L} (1.8 - 0.5)^2 R_D$ (+10)

$\rightarrow \boxed{\frac{W}{L} R_D = 1.48\ k\Omega}$ (+5)

7. (30 pts) For the two amplifiers shown below, draw their small signal equivalent circuit.

- Use the T-model for both transistors in circuit I and neglect the effect of r_0.
- For circuit II, using the hybrid-π model of the transistor and neglect the effect of r_0. Use your small signal equivalent circuit to derive an analytical expression of the input resistance R_{in}.

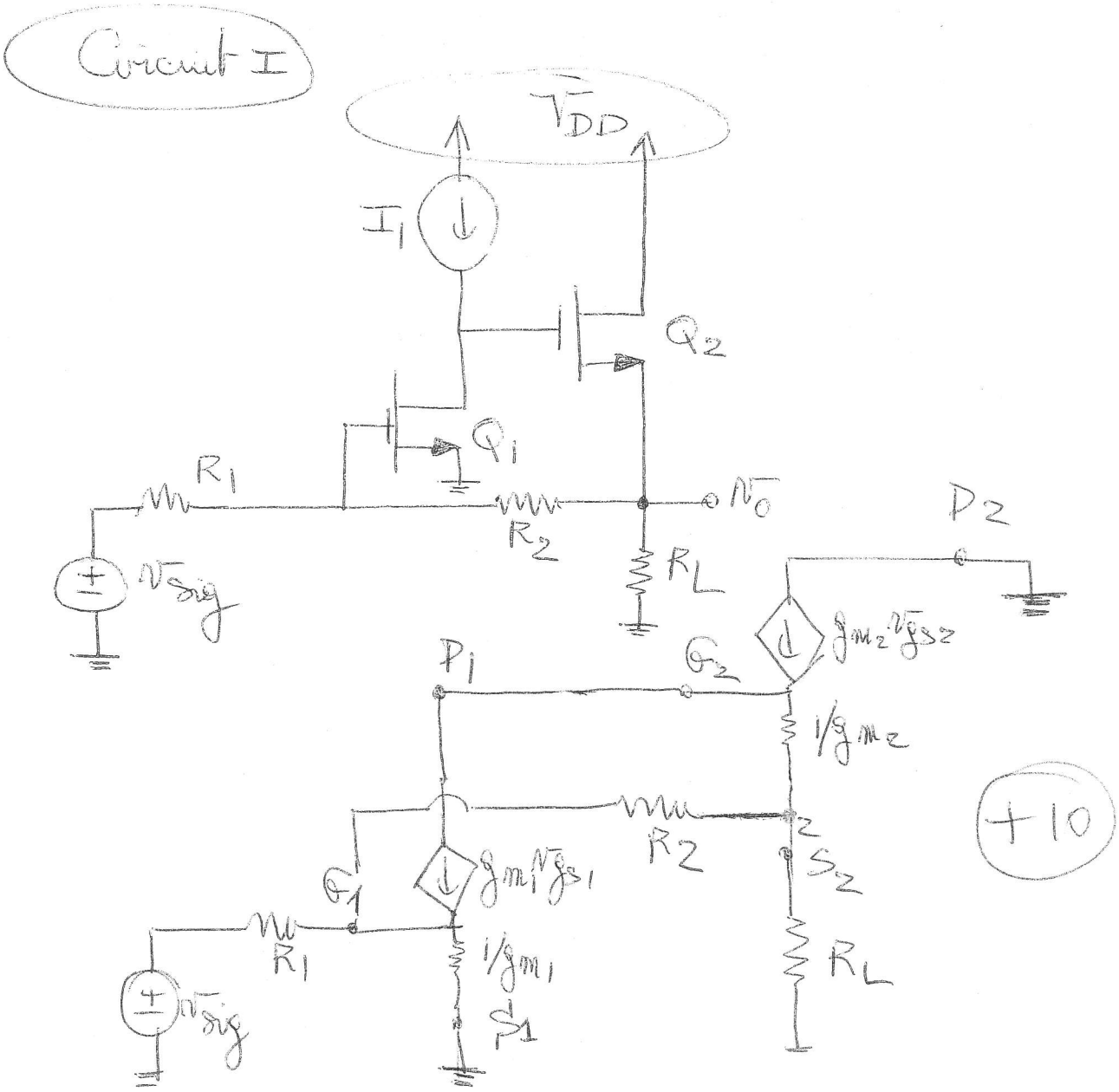

Circuit II

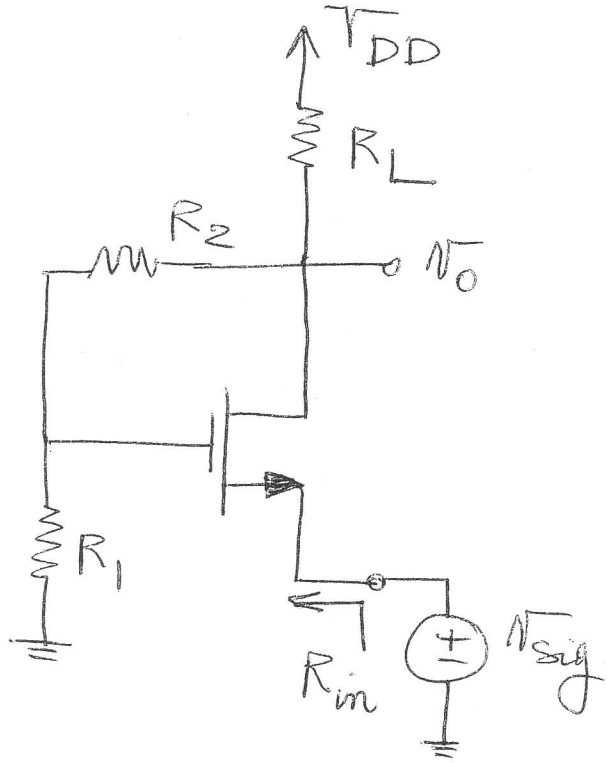

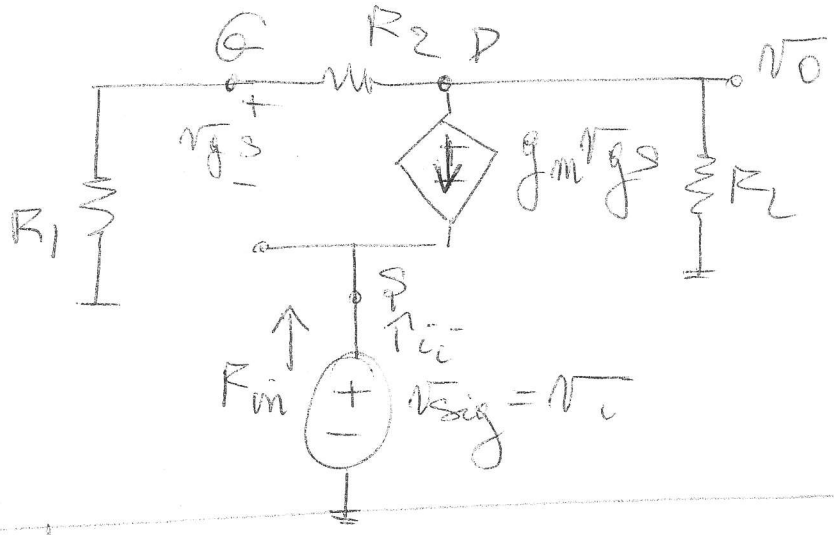

+10

at D

$$\frac{v_{gs}+v_i}{R_1} + g_m v_{gs} + \frac{v_o}{R_L} = 0$$

$$v_{gs} = v_o\left(\frac{R_1}{R_1+R_2}\right) - v_i$$

+10

$$\rightarrow \frac{g_m v_o}{R_1+R_2} + \cancel{\frac{v_i}{R_1}} + g_m v_i + \frac{v_o}{R_L} + \frac{v_o R_1}{R_1+R_2} = 0$$

$$\rightarrow v_o\left[\frac{1+g_m R_1}{R_1+R_2} + \frac{1}{R_L}\right] = g_m v_i$$

$$\frac{v_o}{v_i} = g_m \Big/ \left[\frac{g_m R_1 + 1}{R_1+R_2} + \frac{1}{R_L}\right]$$

$$R_i = \frac{v_{sig}}{i_i}$$

$$-g_m v_{gs} = \left(\frac{1}{R_L} + \frac{1}{R_1+R_2}\right) v_o$$

$$i_i = -g_m v_{gs}$$

$$i_i = \left(\frac{1}{R_L} + \frac{1}{R_1+R_2}\right) v_o$$

$$\frac{i_i}{v_i} = \frac{v_o}{v_i}\left(\frac{1}{R_1+R_2} + \frac{1}{R_L}\right)$$

$$\frac{i_i}{v_i} = \frac{g_m}{\left[\frac{g_m R_1 + 1}{R_1+R_2} + \frac{1}{R_L}\right]} \cdot \frac{1}{\left[\frac{1}{R_1+R_2} + \frac{1}{R_L}\right]}$$

$$\rightarrow \boxed{R_{in} = \frac{v_i}{i_i} = \frac{\left[\frac{g_m R_1 + 1}{R_1+R_2} + \frac{1}{R_L}\right]}{g_m} \cdot \left[\frac{1}{R_1+R_2} + \frac{1}{R_L}\right]}$$

8. (30 pts) For the amplifier shown below with 3 terminals X, Y, and Z, show how to connect to which terminal a signal source v_{sig}, load resistance R_L, and AC ground to build a common-source, common-gate, and common-drain amplifier. Draw the three separate circuits (10 points each).

Common Source

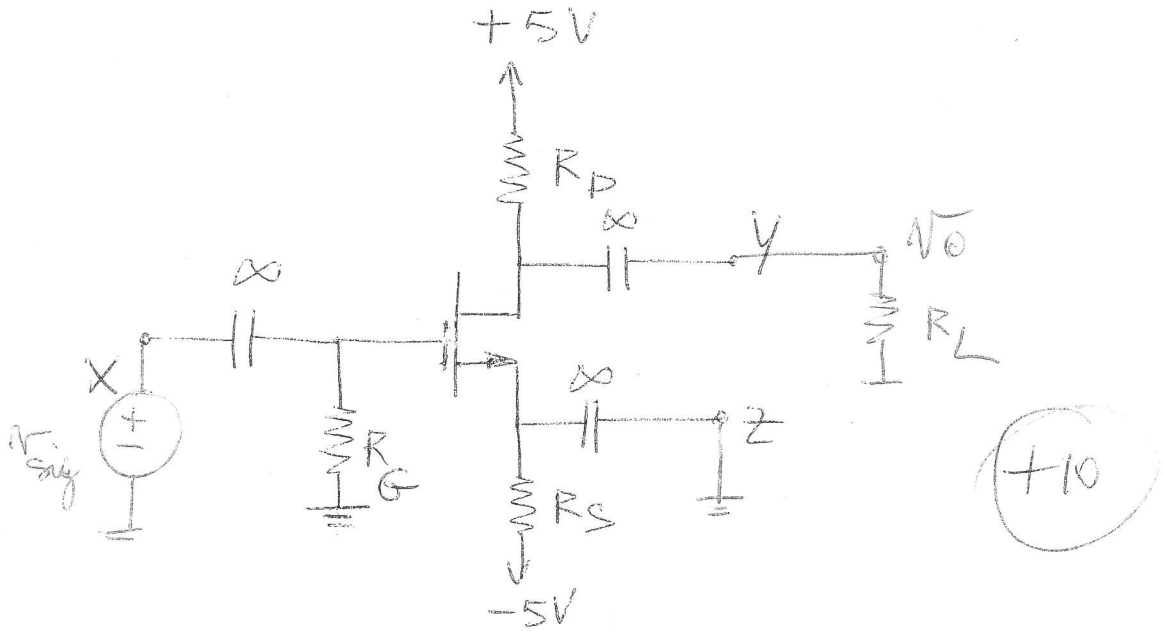

Common gate

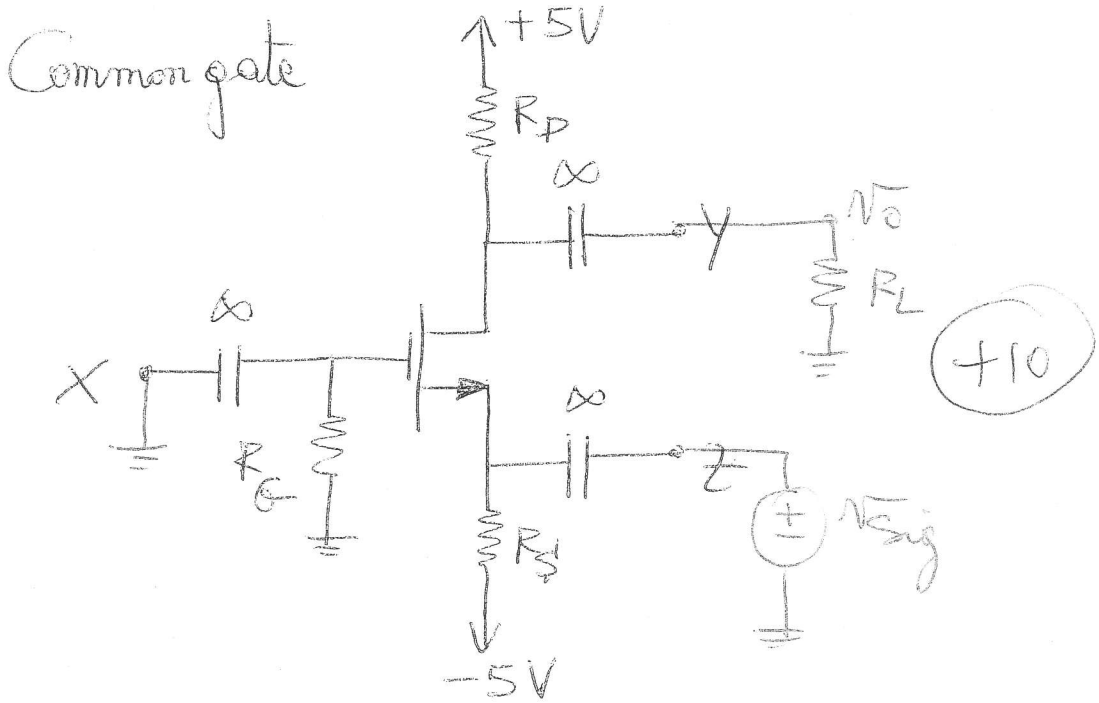

Common Drain