8. (30 pts) For the NMOS amplifier below, replace the transistor with its T equivalent circuit while neglecting the effect of r_0. Calculate the voltage gains v_s/v_i and v_d/v_i.

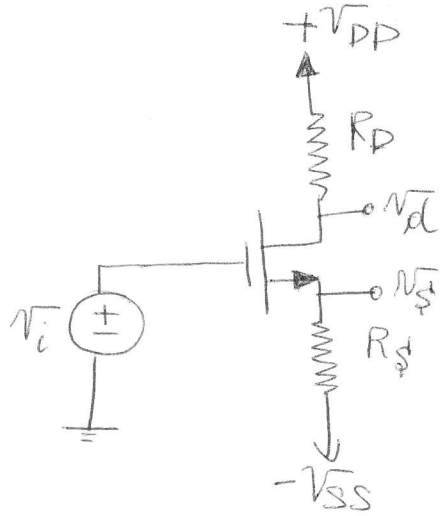

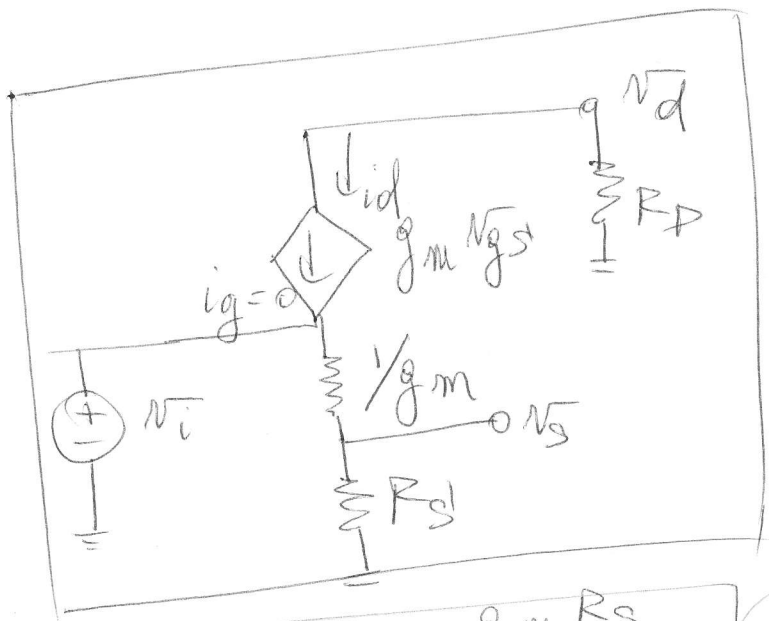

+10

$$\boxed{\frac{v_s}{v_i} = \frac{R_s}{R_s + \frac{1}{g_m}} = \frac{g_m R_s}{[1 + g_m R_s]}}$$ +5

$$v_d = -g_m v_{gs} R_D$$ +5

$$v_{gs} = \frac{1/g_m \, v_i}{1/g_m + R_s} = \frac{v_i}{1 + g_m R_s}$$ +5

So $$\boxed{\frac{v_d}{v_i} = \frac{-g_m R_D}{1 + g_m R_s}}$$ +5

20

V. For the circuit shown below, both transistors are characterized by the following parameters $\mu_n C_{ox} = 20\ \mu A/V^2$, $V_t = 1V$, $\lambda = 0$, L= 10 μm, and $W = 30\mu m$. Find the labeled current and voltage.

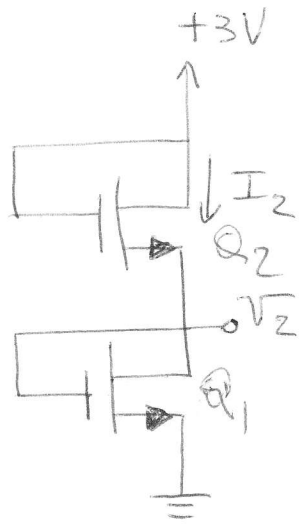

Q_1 Q_2 identical
and operating in saturation
with equal drain currents

$\rightarrow V_{GS1} = V_{GS2}$

$\Rightarrow V_2 = 3 - V_2 \Rightarrow V_2 = \underline{+1.5V}$

$I_2 = \frac{1}{2} \times 20 \times \frac{30}{10}(1.5-1)^2 = \underline{7.5\mu A}$

18

7. (30 pts) For the amplifier circuit shown below:

- Which type of amplifier configuration is it? common source, common gate, or common drain. Circle your answer. +5
- Use the hybrid-π equivalent AC circuit for the transistor and draw the small signal equivalent circuit for the amplifier.
- Give an analytical expression for the input resistance R_{in}, as shown on the diagram.
- Give an analytical expression for the overall voltage gain v_0/v_{sig}.

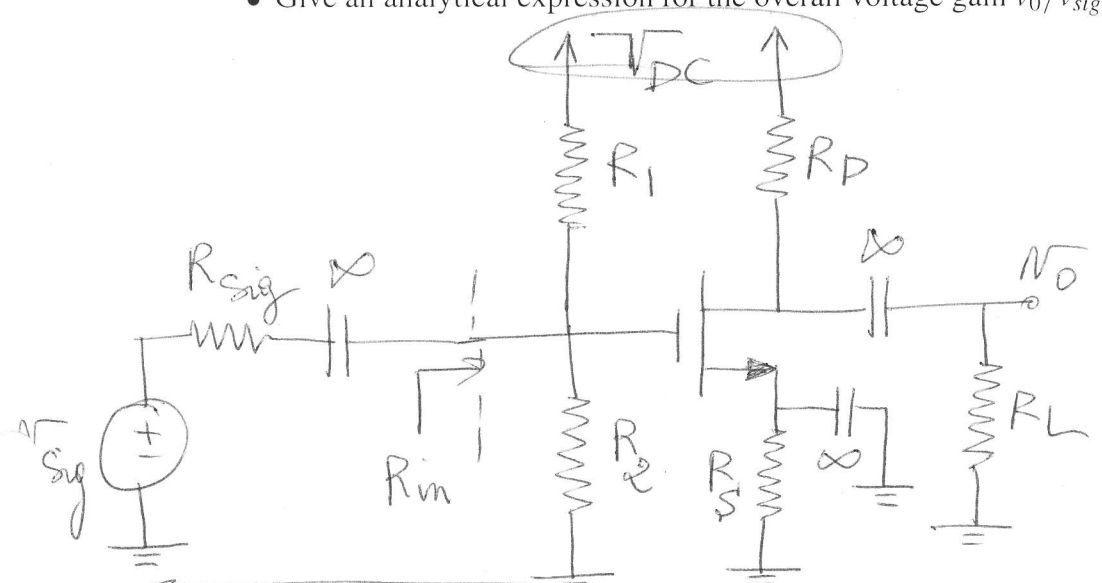

b

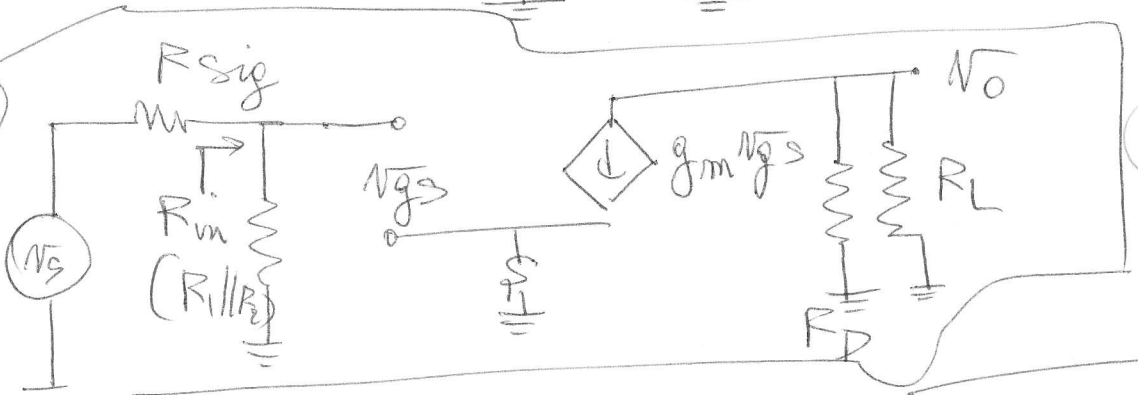

+10

c $R_{in} = (R_1 // R_2)$ +5

d $v_0 = -g_m v_{gs} (R_D // R_L)$ +10

$$v_{gs} = \frac{(R_1 // R_2)}{R_{sig} + (R_1 // R_2)} v_{sig}$$

$$\frac{v_0}{v_{sig}} = -g_m \frac{(R_D // R_L)(R_1 // R_2)}{[R_{sig} + (R_1 // R_2)]}$$

17

6. (20 pts) The transistor in the circuit below has a $V_t = 1V$, $k_n'(\frac{W}{L}) = 0.4mA/V^2$ and $\lambda = 0$.

Find the labeled node voltage V_1.

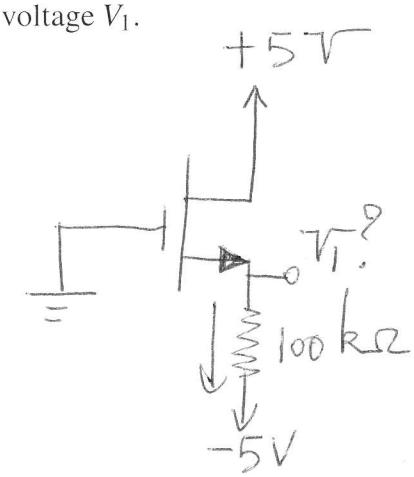

$$\frac{V_1+5}{100} = I = \frac{1}{2}\,0.4\,(5 - \underbrace{100I - 1}_{V_1})^2 \quad +5$$

$$I = 0.0\cancel{15} \,/\, 0.036 \text{ mA} \quad +5$$

only acceptable solution

because $V_{GS} < V_t \rightarrow$ cut-off +5

$$\boxed{V_1 = -5 + 100I = -1.4V} \quad +5$$

or

$$I = \frac{1}{2} k' \frac{W}{L} (V_{GS} - V_t)^2$$

$$= \frac{1}{2} k' \frac{W}{L} (0 - V_1 - V_t)^2$$

$$= \frac{1}{2} k' \frac{W}{L} (-(-5 + 100I) - 1)^2$$

$$I = 0.2(4 - 100I)^2 \rightarrow I_1, I_2 \text{ above}$$

5. (20 pts) The NMOS transistors in the circuit below have $V_t = 1V$, $k_n'(\frac{W}{L}) = 2mA/V^2$ and $\lambda = 0$.

Find the labeled node voltages, V_1, V_2, and V_3.

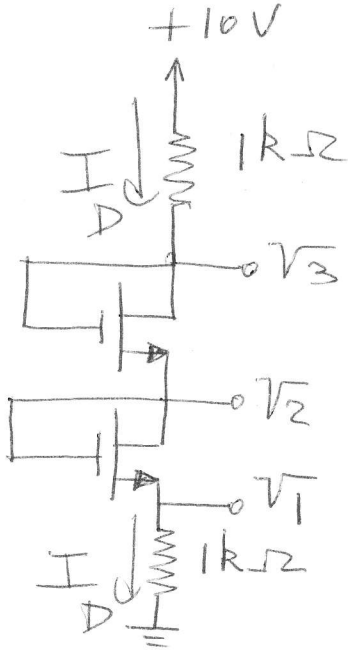

$$\boxed{\frac{10-V_3}{1} = \frac{V_1}{1} = I \quad (1)} \quad +4$$

$$\boxed{I_{D_1} = \frac{V_1}{1} = \frac{1}{2}\cdot 2\,(V_3 - V_2 - 1)^2 \quad (2)} \quad +4$$

$$\rightarrow V_1 = (V_3 - V_2 - 1)^2$$

$$\boxed{I_{D_2} = \frac{V_1}{1} = \frac{1}{2}\cdot 2\,(V_2 - V_1 - 1)^2 \quad (3)} \quad +4$$

$$\boxed{(2)\,(3) \rightarrow V_3 - V_2 - 1 = V_2 - V_1 - 1 \rightarrow V_1 = 2V_2 - V_3 \quad (4)}$$

$$(1)\,(4) \rightarrow 2V_2 - V_3 = 10 - V_3 \rightarrow \boxed{V_2 = 5\,V} \quad +4$$

$$\rightarrow V_1 = (4 - V_1)^2 \rightarrow \boxed{V_1^2 - 9V_1 + 16 = 0}$$

$$+4 \rightarrow \boxed{V_1 = 6.\cancel{55} \text{ or } 2.45V}$$

$$\rightarrow \boxed{I_D = \cancel{2.4mA} \xrightarrow{\text{from } (1)\ 2.45mA} \boxed{V_3 = 10 - 2.45\,mA(1k\Omega) = 7.55V}}$$

15

VI. The MOSFET in the circuit below has $V_t = 1V$, K=0.4mA/V^2, and $V_A = 40V$. (a) Assuming $R_D = 50k\Omega$, find R_S and R_G so that $I_D = 0.1mA$. (b) Find the values of g_m and r_o at the bias point. (c) If terminal Y is grounded, find the voltage gain from X to Z with Z open-circuited. (d) If terminal X is grounded and terminal Z is connected to a current source delivering a current of $10\mu A$ and having a resistance of 100 k Ω, find the voltage signal at Y. Neglect r_o in that case.

amplitude

ac + c.

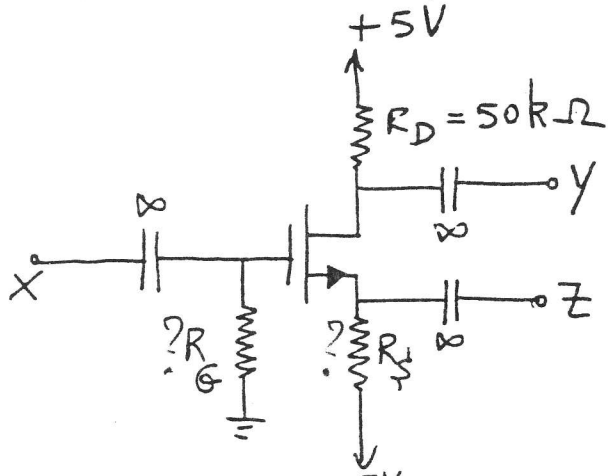

R_G undetermined but must be high

Choose $R_G = 10\ M\Omega$ (+2)

$V_D = 0$

(+2) $R_D = \frac{5-0}{0.1} = 50\ k\Omega$

$0.1 = 0.4(V_{GS}-1)^2$

$V_{GS} = 1.5\ V$ (+2)

$\Rightarrow V_S = -1.5\ V$ (+2)

$R_S = \frac{-1.5-(-5)}{0.1} = 35\ k\Omega$ (+2)

$g_m = 2K(V_{GS} - V_t) = 0.4\ mA/V$ (+2)

$r_o = \frac{V_A}{I_D} = 400\ k\Omega$ (+2)

(c)

$$A_v = \frac{(R_S // r_o)}{(R_S // r_o) + \frac{1}{g_m}} = 0.928\ V/V \quad (+2)$$

(d)

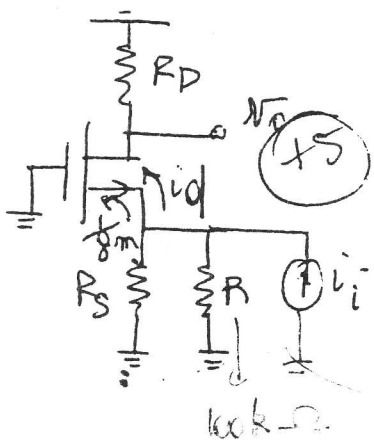

$$i_d = i_i \frac{(R // R_S)}{(R // R_S) + 1/g_m} \quad (+2)$$

$$= 10 \frac{(100//35)}{(100//35) + \frac{1}{0.4}} = 9.12\ \mu A$$

$V_o = R_D i_d = 9.12 \times 50 = 456\ mV$ (+2)

14

8. (25 pts) The amplifier circuit shown below is biased in the saturation mode of operation with a value of the transconductance $g_m = 1$ mA/V. Assume $\lambda = 0$.

- Use the hybrid-π model of the transistor and draw the small signal equivalent circuit for the amplifier.
- Calculate the voltage gain v_0/v_{sig}.

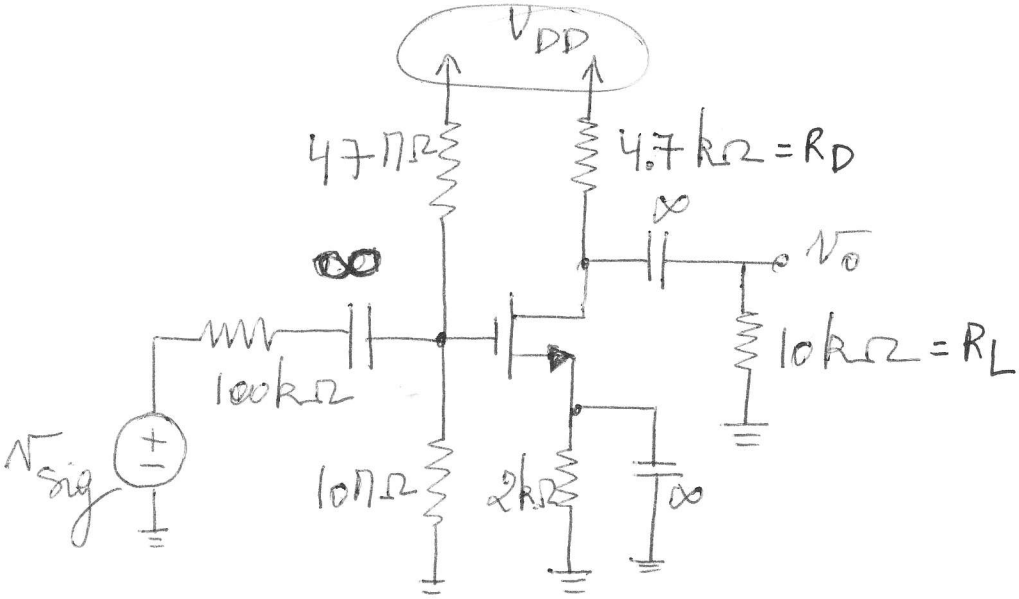

12

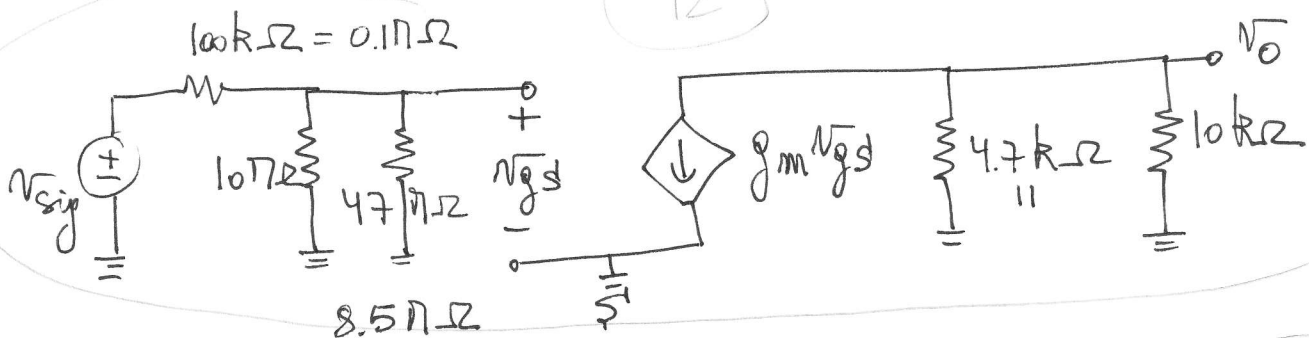

$$V_{gs} = \left[\frac{\overbrace{(47//10)}^{8.5M\Omega}}{(47//10)+0.1}\right] V_{sig}$$

$$\frac{V_o}{V_{sig}} = -g_m (R_D//R_L) \cdot \left\{\frac{(47//10)}{(47//10)+0.1}\right\}$$

12

$$\rightarrow \frac{V_o}{V_{sig}} = -1(4.7k//10k) \cdot \left[\frac{8.25}{8.25+0.1}\right]$$

$$\rightarrow \boxed{\frac{V_o}{V_{sig}} = -3.16 V/V}$$

+1

6. (25 pts) In the circuit below, the NMOS has a $|V_t|$ of = 0.9 V and a V_A of 50 V and operates with $V_D = 2V$.

(a) • Using the hybrid-π model of the MOS transistor, draw the small signal equivalent circuit of the amplifier. Include the effect of r_0.

(b) • What do the DC value V_D becomes if the current I is changed to 1 mA? Neglect the effects of V_A in the expression of I_D.

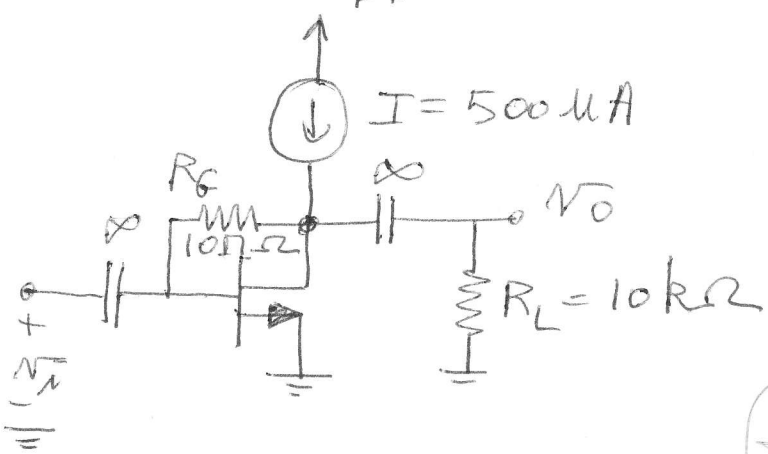

+13

(a)

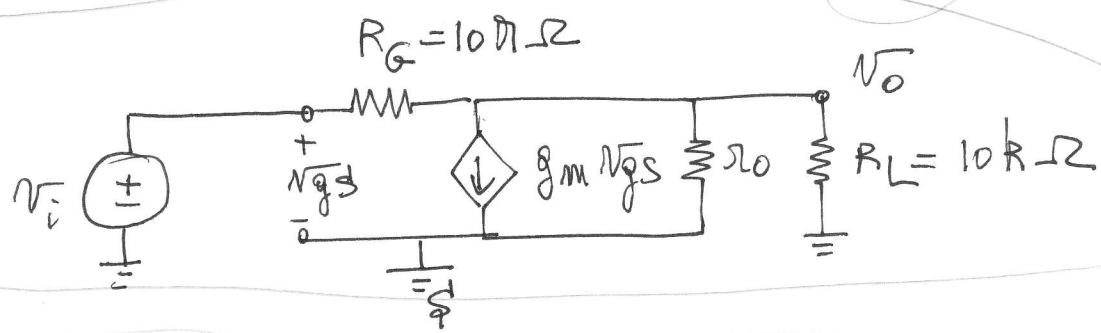

(b) $I_{D_1} = \frac{k_n'}{2}\frac{W}{L}(V_{GS_1} - V_t)^2$ For $I_{D_1} = 500\,\mu A$

$I_{D_2} = \frac{k_n'}{2}\frac{W}{L}(V_{GS_2} - V_t)^2$ For $I_{D_2} = 1\,mA$

+12

$\frac{I_{D_1}}{I_{D_2}} = \frac{(V_{GS_1} - V_t)^2}{(V_{GS_2} - V_t)^2} \rightarrow V_{GS_2} = V_t + \sqrt{2}(V_{GS_1} - V_t)$

$\rightarrow$

$V_{GS_2} = 0.9 + \sqrt{2}(2 - 0.9) = \underline{\underline{2.5V}}$

$V_{D_1} = V_{GS_1}$

$V_{D_2} = V_{GS_2}$

5. (25 pts) The NMOS transistors in the circuit below have $V_t = 1V$, $\mu_n C_{ox} = 120\mu A/V^2$, $\lambda = 0$, and $L_1, L_2, L_3 = 1\ \mu m$.

Find the required values of the gate widths W_1 of Q_1, W_2 of Q_2, W_3 of Q_3 to obtain the voltage and current values indicated on the figure.

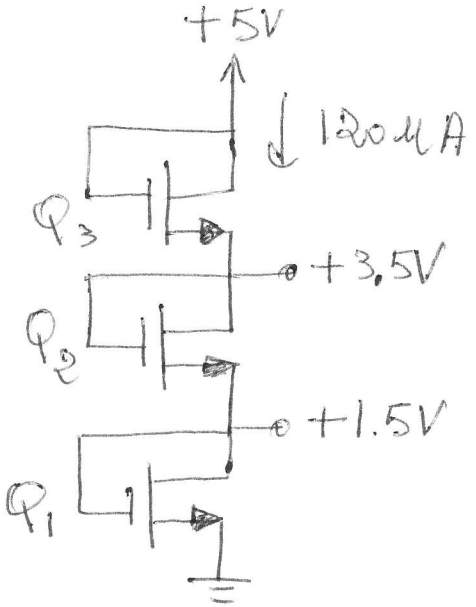

$$I_D = \frac{1}{2} k_n' \frac{W}{L} (V_{GS} - V_T)^2$$

$$k_n' = \mu_n C_{ox}$$

$$V_{GS_1} = 1.5V \rightarrow 120\mu A = \frac{1}{2} \cdot 120 \cdot \frac{W_1}{L_1} (1.5-1)^2 \rightarrow W_1 = \underline{\underline{8\ \mu m}}$$

$$V_{GS_2} = 3.5 - 1.5 = 2V \rightarrow 120 = \frac{1}{2} 120 \frac{W_2}{L_2} (2-1)^2 \rightarrow W_2 = \underline{\underline{2\ \mu m}}$$

$$V_{GS_3} = 1.5V \rightarrow W_3 = W_1 = \underline{\underline{8\ \mu m}}$$